STANDARD SILK-SCREEN

F.P.O.

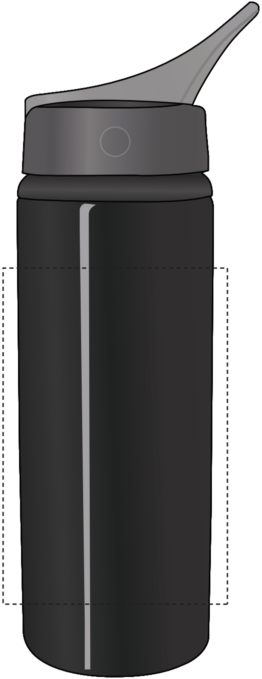

COMPOSITE
NOT ACTUAL SIZE

Dashed Line For Imprint Area Only, Will Not Print.

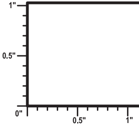

Artist/Date:
Order #:
Ship Date:
Imprint Color:
Item Color:

Item # : 5505
Imprint Size : Silk-Screen
Silk-Screen : 3" W x 4 ½" H
Wraparound : 6" W x 4 ½" H
Imprint Type : Standard Silk-Screen

Proofing:

WRAPAROUND

Dashed Line For Imprint Area Only, Will Not Print.

Artist/Date:
Order #:
Ship Date:
Imprint Color:
Item Color:

Item # : 5505
Imprint Size : Silk-Screen
Silk-Screen : 3" W x 4 ½" H
Wraparound : 6" W x 4 ½" H
Imprint Type : Standard Silk-Screen

Proofing:

F.P.O.

2 sid

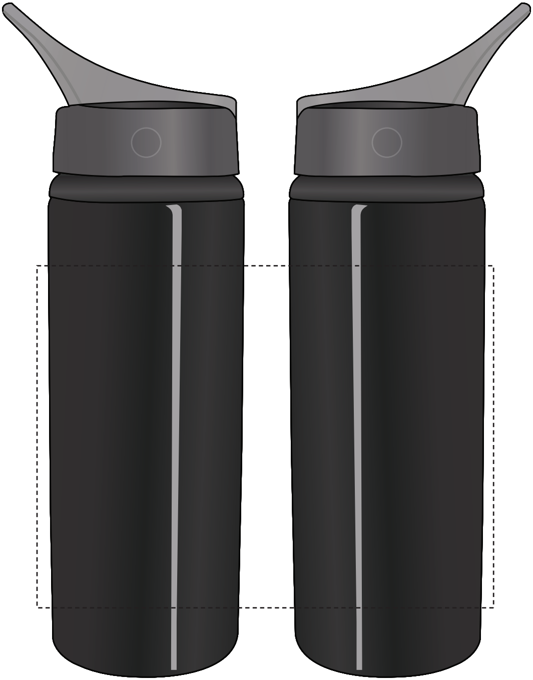

COMPOSITE
NOT ACTUAL SIZE

ed

Dashed Line For Imprint Area Only, Will Not Print.

Artist/Date:
Order #:
Ship Date:
Imprint Color:
Item Color:

Item # : 5505
Imprint Size : Silk-Screen
Silk-Screen : 3" W x 4 ½" H
Wraparound : 6" W x 4 ½" H
Imprint Type : Standard Silk-Screen

Proofing:

F.P.O.

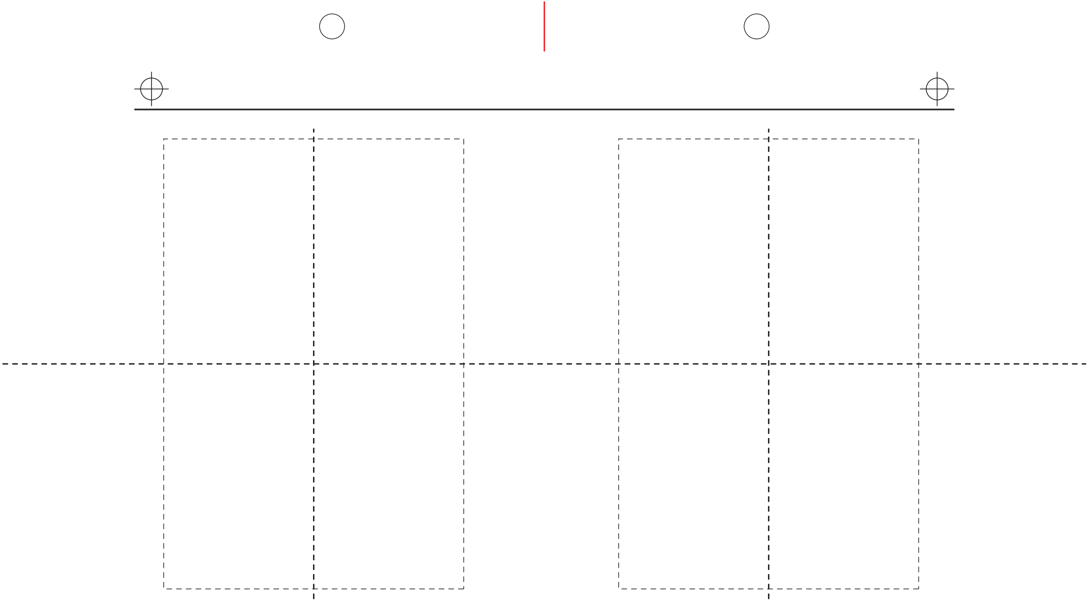

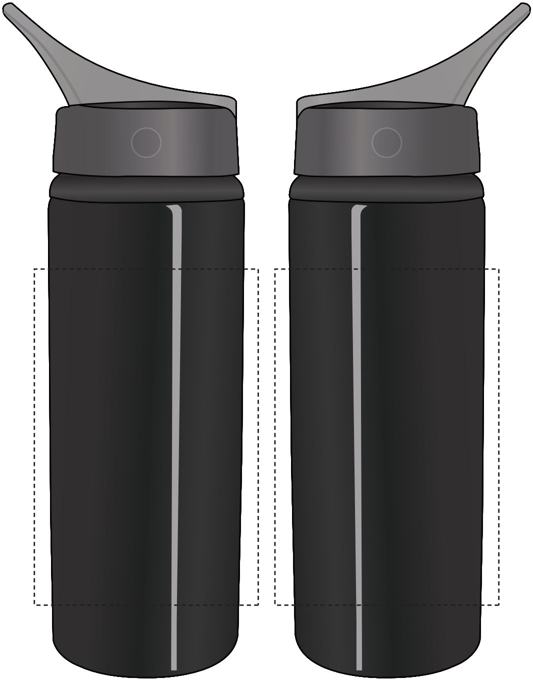

COMPOSITE
NOT ACTUAL SIZE